ITREND®

Life+

CENTRAL WAKAD

2 & 3 BHK PLUS HOMES

A Project By

SAHEEL® PROPERTIES
Bridging The Future

KOHINOOR®
A KRISHNAKUMAR GOYAL ENTERPRISE

Aren’t we all seeking a little extra from *life?*

A little extra **Happiness**

A little Extra **Leisure**

A little Extra **Luxury**

A little Extra **Space**

A little Extra **Comfort**

That's exactly what we bring you here in this

Plus Lifestyle.

A Little extra of all the small and big joys of life.

The Plus Success

AFTER THE BOUNDLESS SUCCESS OF

I TREND® Life3

WAKAD

I TREND® Life2

WAKAD

I TREND® Life

#Beyond4Walls

WAKAD

I TREND™ WATERFRONT

RAVET

I TREND™ HOMES

LIFE TRENDS HERE

HINJAWADI II



The Plus+ Life!



Artist's Impression.

Live Life Plus Size

These Plus size homes are your savior from cluttered spaces and tiny homes. From bedroom to kitchen, the entire house has been modeled on the idea of giving you the liberty to build a plus-style lifestyle. The homes are spacious enough to fit your big dreams and give each member of your family the space to bond, grow, and enjoy their respective lives.

Indulge in Plush and Plus Style Amenities

Every bit of this lifestyle has been carefully crafted to give you the feel and experience of a premium and plush lifestyle. From aesthetically designed indoors, to amenity-laden outdoors, extravagant lifestyle features to a bunch of fancy indulgences, it's a rich, wholesome lifestyle designed to Pamper you with luxuries on every step of the way.

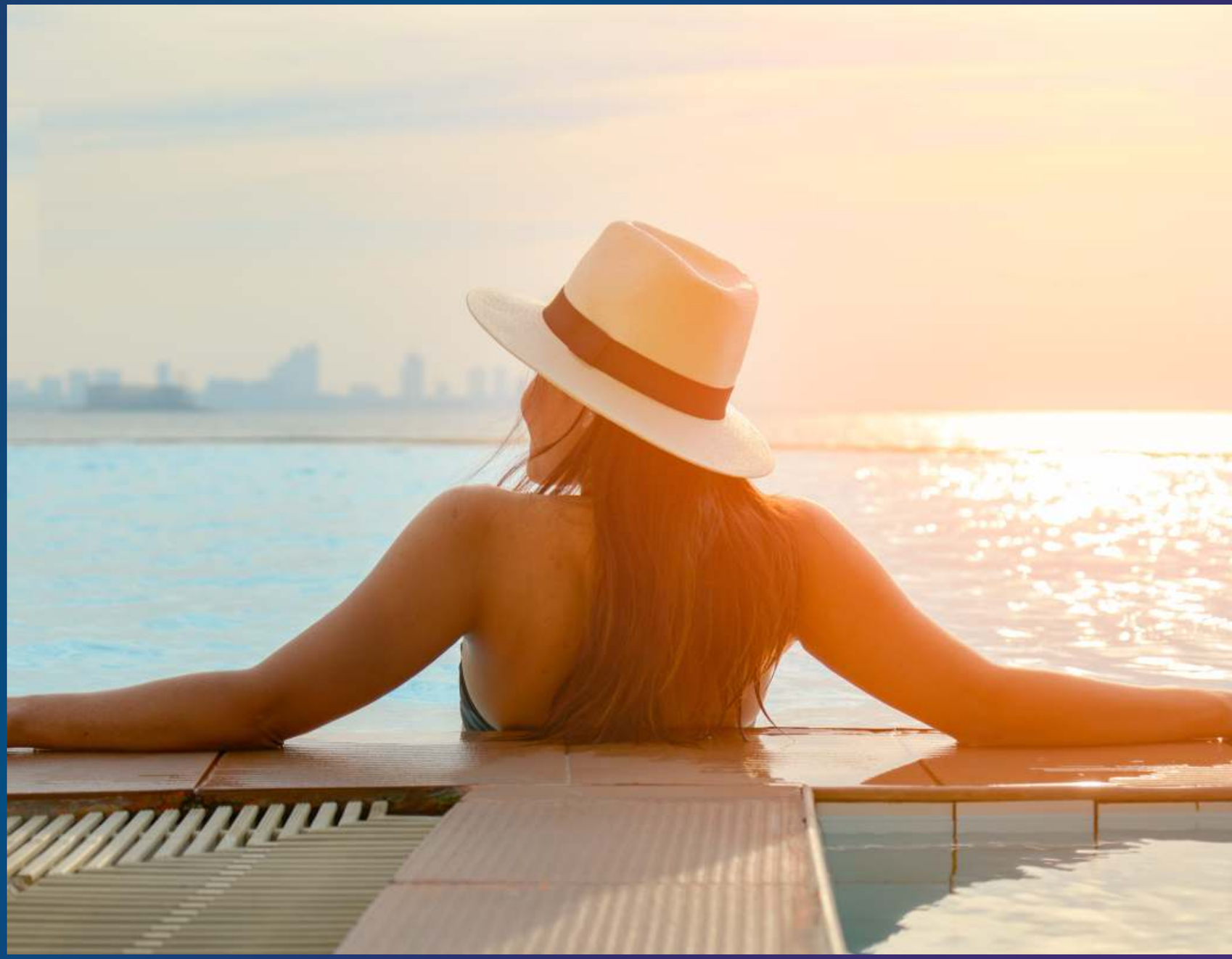



Artist's Impression.

Make Room for Plus Size Happiness

It's an umbrella lifestyle comprising every bit of joy that you could ask for a happy lifestyle. A pool and a party lawn so that you always have a place to chill, a Gymnasium and a jogging track so you don't let your workout skip, a multipurpose hall and indoor games so the fun never ceases to exist, a gazebo and open area for you to experience bliss and peace. It's an all comprising lifestyle that's going to plus some extra pleasures in your life.

Plus the Joy, Minus the Stress

It’s sited at the heart of the city which brings you closer to all the extravagances, treats, and premium hotspots of the city. Be it an impromptu family dinner or a quick commute to the office, a day at the shopping mall, or a walk to your kid’s school, travel isn’t going to be a hassle anymore. It’s close to everything that you need to connect and vibe with the city while giving yourself the space to enjoy the peace of your own home.



#LiveThePlusLife



Artist’s Impression.

#LiveThePlusLife



Artist’s Impression.

PROJECT LAYOUT



Artist's Impression.

#LiveThePlusLife

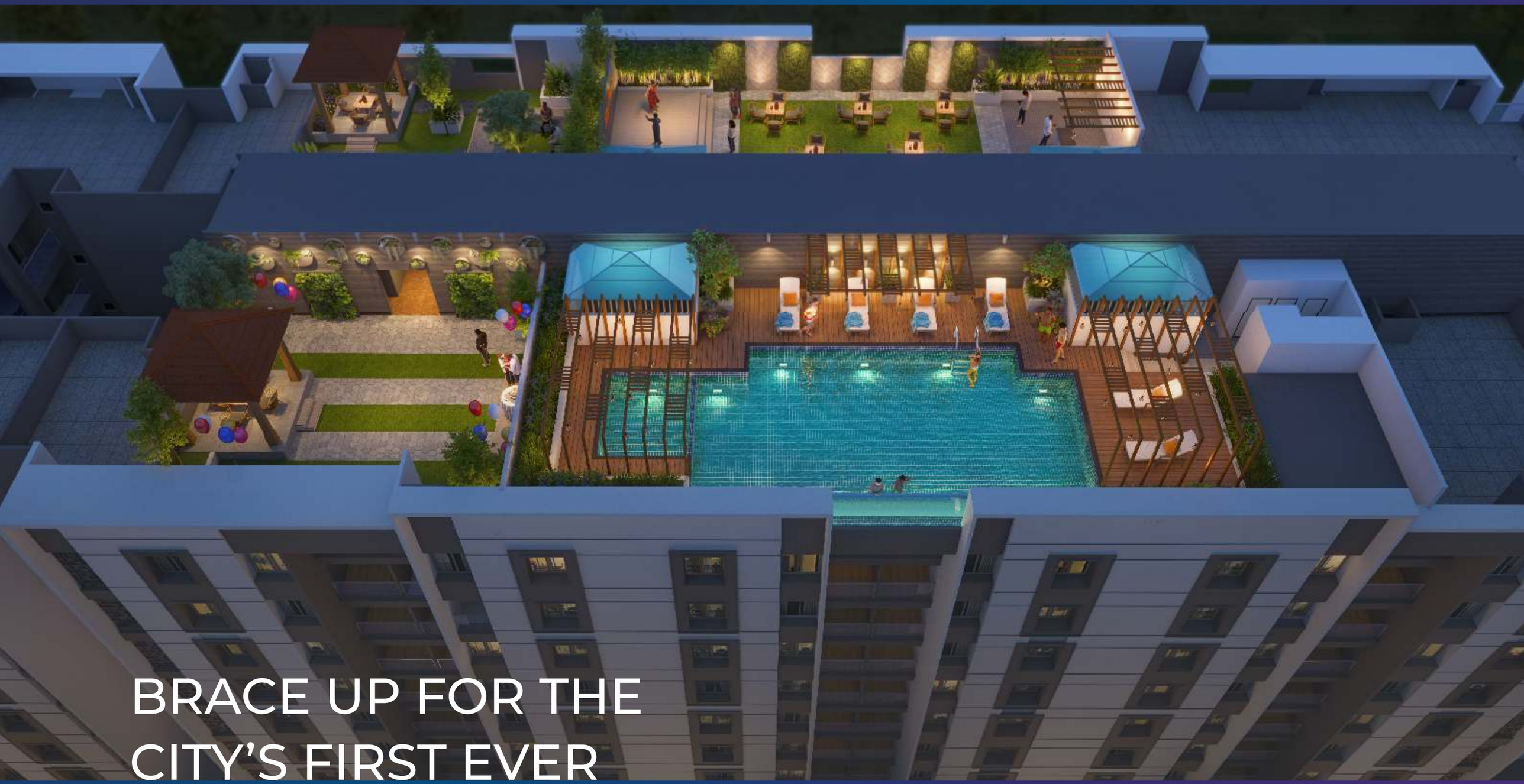

BRACE UP FOR THE
CITY'S FIRST EVER

PLUS LIFESTYLE

Artist's Impression.

#LiveThePlusLife

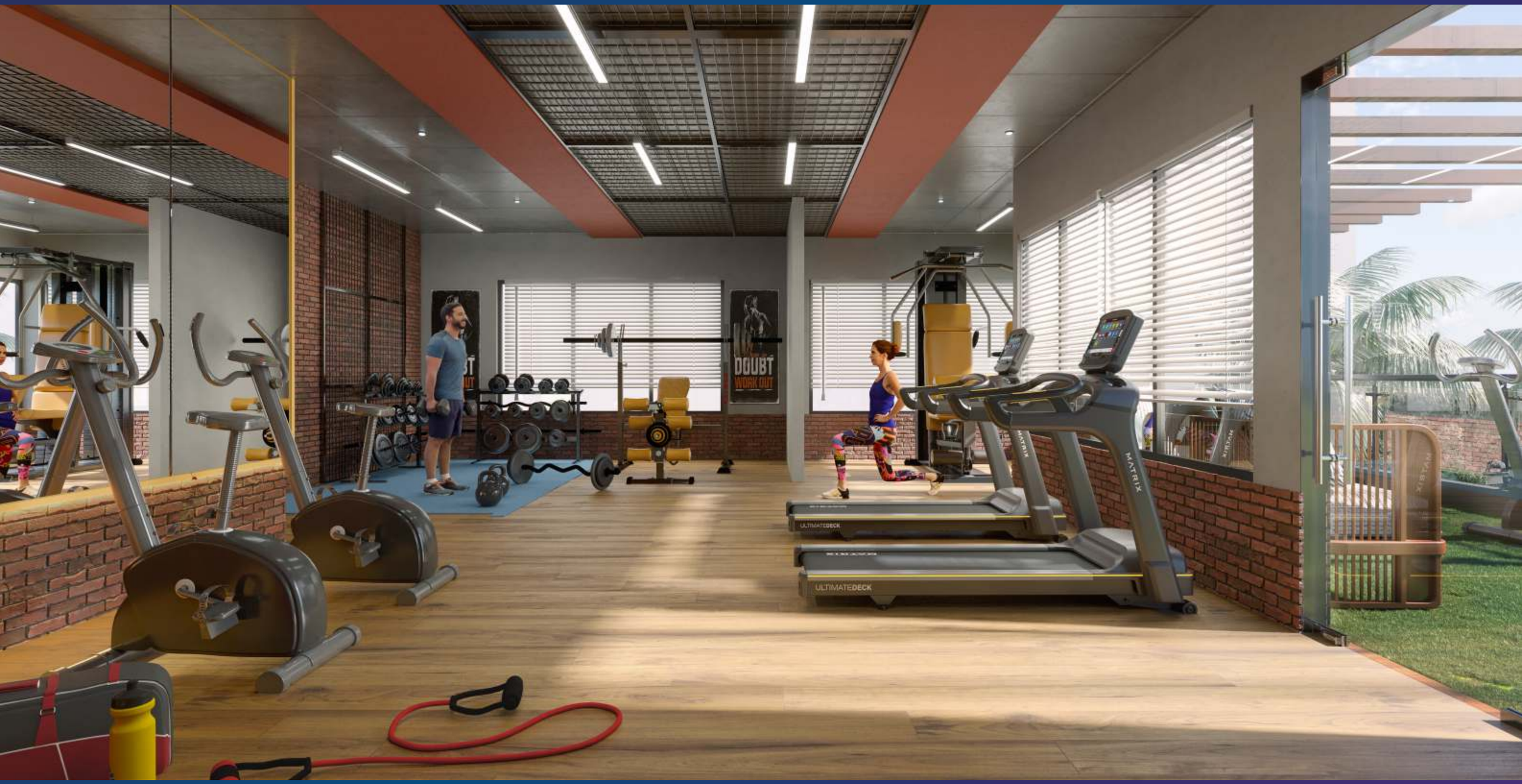

Artist’s Impression.

The Plus Advantage

- **Biggest Bedroom** size in the vicinity
- **Biggest Kitchen** size in the vicinity
- Enjoy 100% FSI - Full Privacy with Balcony instead of Terrace
- Perfectly Planned Plus Spaces for WFH, Pooja, Dressing, Cupboard etc.



The Plus Advantage

- 18 Plus Lifestyle Amenities
- Bay Window in Bedrooms
- Vastu Compliant Plus Homes
- Excellent Lifestyle Convenience & Connectivity

The Plus Amenities



ROOFTOP AMENITIES


Swimming Pool


Party Lawn


Jogging Track


Open Gym


Senior Citizen Sitouts


Gazebo


Yoga & Meditation Area


Poolside Deck Area


Acupressure Track

Images are used for Represntation Purpose Only.

INDOOR AMENITIES


Gymnasium


Multipurpose Hall


Indoor Games


Co-Working & WFH Spaces

Images are used for Represntation Purpose Only.

OTHER AMENITIES


Multipurpose Play Court


Children's Play Area


Open Space


Entrance Plaza


Flag Hoisting

Images are used for Represntation Purpose Only.

The Plus Rules Of Living

THE LOCATION RULE:
Make your life complete in every way





THE BREAKFAST RULE:
Don't miss breakfast, just because you have to catch a flight.

THE WORK-LIFE RULE:
Don't spend your life on the road between office and home.





THE GREEN RULE:
Say good morning to the trees Or if you prefer, greet them in the evenings.



THE SUNDAY RULE:
Switch off the television, switch on priceless moments with the family.

THE CONVENIENCE RULE:
Shop for what you need, when you need it.





THE HAPPINESS RULE:
The moment of owning a home is the beginning of happiness for a lifetime.

THE TODAY RULE:
Invest today for a golden tomorrow.



PLUS SPECIFICATIONS

Each and every specification of your new home has been crafted carefully to ensure you get the pampering you deserve. Your new life should be the epitome of comfort, class, and luxury and we have gone that extra mile to offer you just that.

STRUCTURE
- Earthquake Resistant
- Internal Gypsum Finish Plaster, External Sand Finish Plaster

KITCHEN
- Granite Platform
- Stainless Steel Sink
- Dado up to Two Feet from Otta
- Provision for CHIMNEY & Hob
- Utility Loft

DRY BALCONY
- Washing Machine Point
- Proper Water Inlet and Outlet Point

FLOORING
- 2*2 Vitrified Tiles
- Anti Skid Wooden Finish Tiles in Terrace
- Toilets-Designer Glazed Tiles, Anti-skid Tiles for Flooring
- 2*2 Wooden Finish Vitrified Tiles in Master Bedroom

DOORS
- All Four Side Granite Frame for Windows and Sliding Doors
- Moulded Doors
- All Granite Counter Basin
- Glass Railing for attached Living & Bedroom Terrace
- Safety Grill for Windows
- Digital Video Door Phone with Intercom
- Laminated Doors with Mortise Lock Fitting for all Doors
- Aluminium Sliding Doors for Terrace
- Granite & Wooden Door Frame in Bath / WC – Wooden Door Frame Elsewhere

Windows
- 3 Track Aluminum Windows – Granite Sill for all Windows

PAINTING
- Branded Internal Paint – Semi Acrylic (Tractor Emulsion) External Paint

TOILETS
- Designer Glazed Dado Tiles, Anti-skid Tiles for Flooring
- Provision for Exhaust Fan in Toilets
- Provision for Solar and Geyser in Master Toilet
- Branded Sanitaryware
- Branded CP Fittings

ELECTRIC
- Branded Modular Switches
- TV Point in Living & Master Bedroom
- Concealed Wiring with Circuit Breakers
- Tele Point in Living
- Provision for DTH Connection
- AC Point in Master Bedroom& Living Room
- 1 Broadband Point
- Hob & Chimney Plug Point
- Provision for Inverter at kitchen Loft
- 1 Socket Point at Attached Terrace in Master Bedroom & Living

UTILITIES & OTHER
- Automatic Elevators
- Power Back-up for Common Areas and Inverter Point in Home
- Solar Water Heater (in Master Bathroom), Provision for Geyser in other Bathrooms
- Decorative Ground Floor Lobby
- Provision for Car Charging Point (Only Cable Tray & Transformer Capacity)

SECURITY
- CCTV Surveillance in Common Areas
- Decorative Lobby Main Gate at Project Entry

MASTER LAYOUT

The Plus Planning

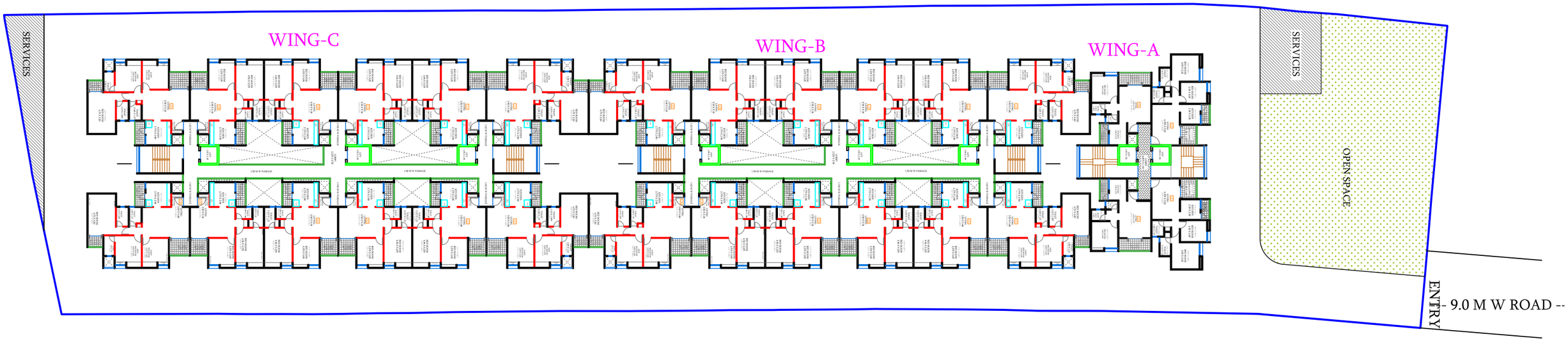

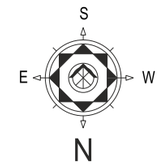

PLUS 2 BHK UNIT PLAN

(747 sq.ft. Carpet)

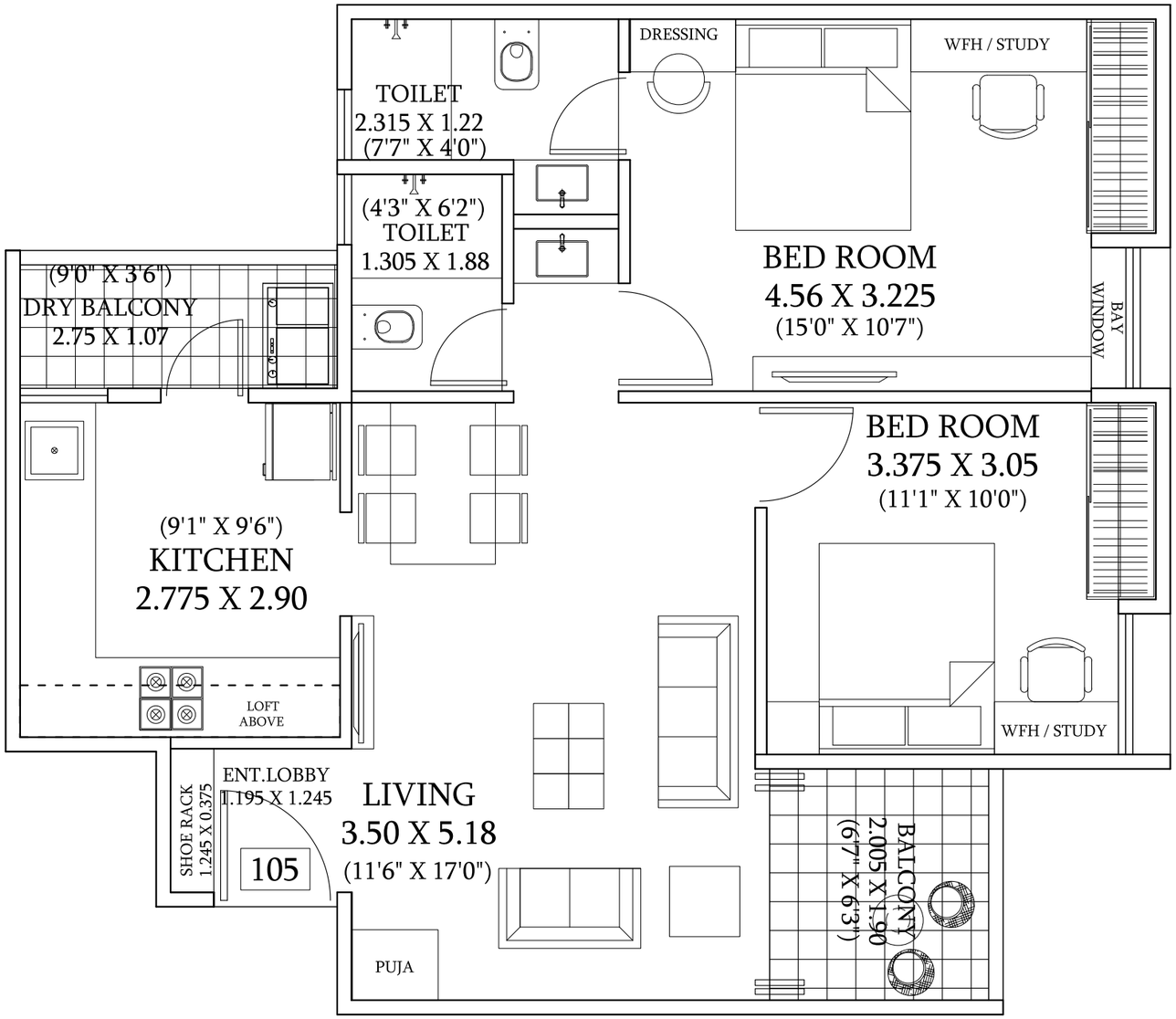

PLUS 3 BHK UNIT PLAN

(975 sq.ft. Carpet)

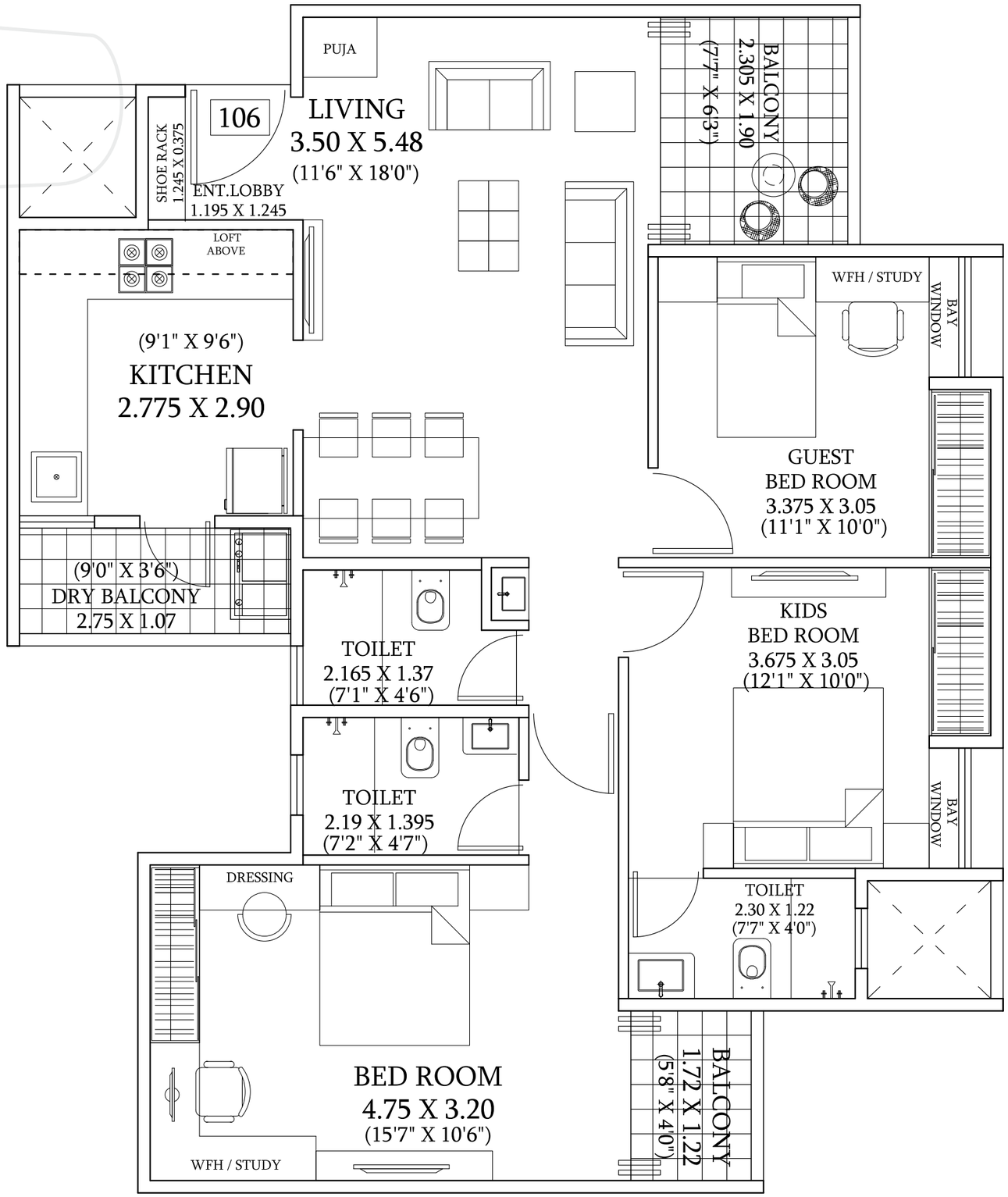

TYPICAL FLOOR PLAN FOR WING B & C

(1st to 6th, 8th Floor)

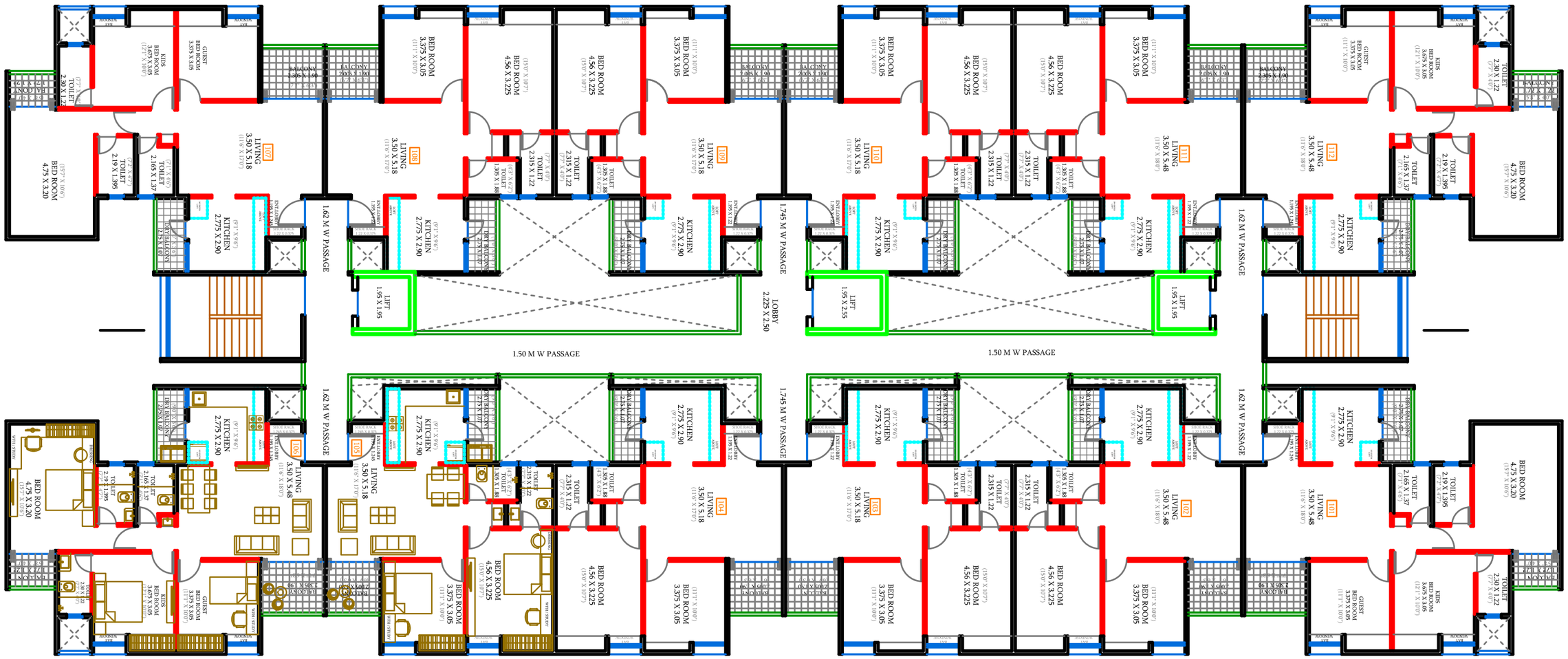

Flat No.	Flat Type	Carpet Area (sq.m.)	Open Balcony (sq.m.)	Total Carpet Area (sq.m.)	Total Carpet Area (sq.ft.)
101	3 BHK	81.13	9.42	90.55	974.68
102	2 BHK	62.68	6.75	69.43	747.34
103	2 BHK	62.68	6.75	69.43	747.34
104	2 BHK	62.68	6.75	69.43	747.34
105	2 BHK	62.68	6.75	69.43	747.34
106	3 BHK	81.13	9.42	90.55	974.68

Flat No.	Flat Type	Carpet Area (sq.m.)	Open Balcony (sq.m.)	Total Carpet Area (sq.m.)	Total Carpet Area (sq.ft.)
107	3 BHK	81.13	9.42	90.55	974.68
108	2 BHK	62.68	6.75	69.43	747.34
109	2 BHK	62.68	6.75	69.43	747.34
110	2 BHK	62.68	6.75	69.43	747.34
111	2 BHK	62.68	6.75	69.43	747.34
112	3 BHK	81.13	9.42	90.55	974.68



REFUGE FLOOR

(7th Floor)

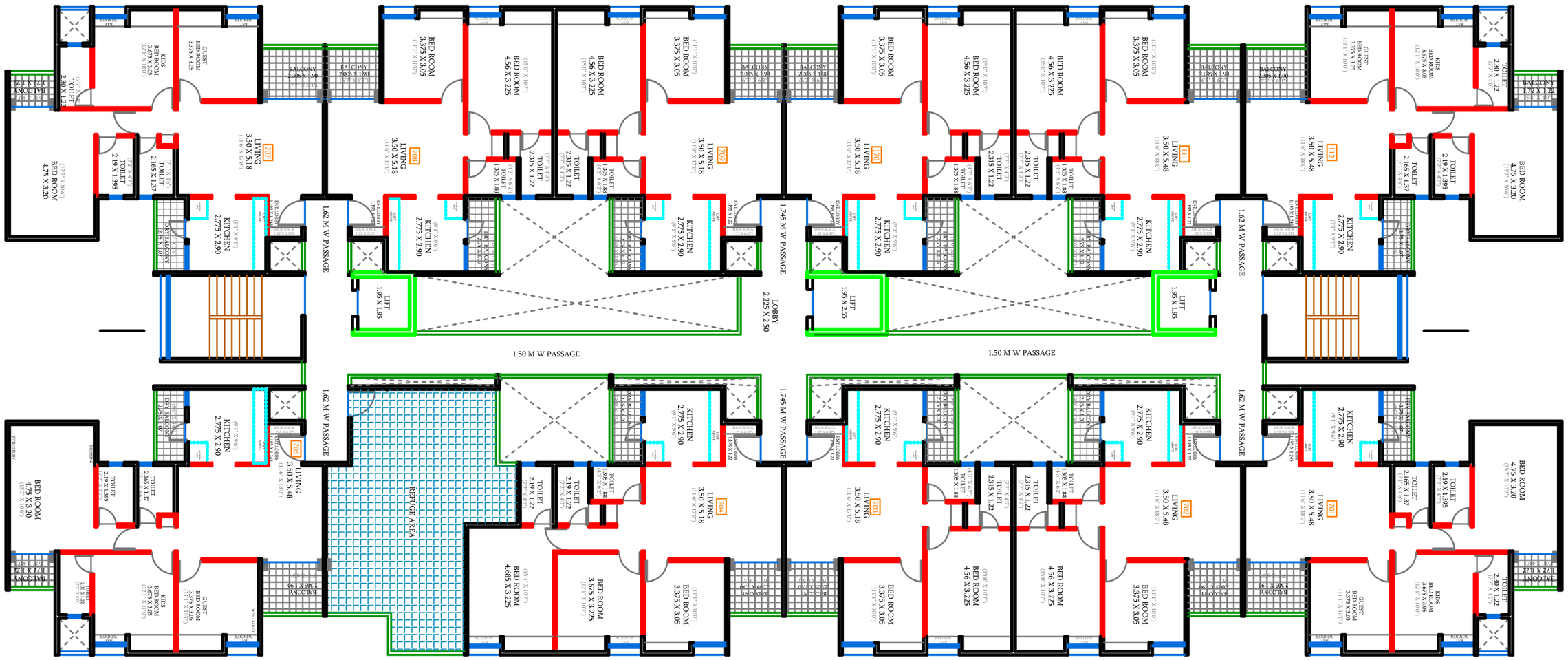

Flat No.	Flat Type	Carpet Area (sq.m.)	Open Balcony (sq.m.)	Total Carpet Area (sq.m.)	Total Carpet Area (sq.ft.)
701	3 BHK	81.13	9.42	90.55	974.68
702	2 BHK	62.68	6.75	69.43	747.34
703	2 BHK	62.68	6.75	69.43	747.34
704	3 BHK	80.98	6.75	87.73	944.33
705		REFUGE			
706	3 BHK	81.13	9.42	90.55	974.68

Flat No.	Flat Type	Carpet Area (sq.m.)	Open Balcony (sq.m.)	Total Carpet Area (sq.m.)	Total Carpet Area (sq.ft.)
707	3 BHK	81.13	9.42	90.55	974.68
708	2 BHK	62.68	6.75	69.43	747.34
709	2 BHK	62.68	6.75	69.43	747.34
710	2 BHK	62.68	6.75	69.43	747.34
711	2 BHK	62.68	6.75	69.43	747.34
712	3 BHK	81.13	9.42	90.55	974.68



PLUS CONNECTIVITY



CENTRAL WAKAD

Plus The Convenience

PLUS CONNECTIVITY

SCHOOLS

Early Nest	- 240m
Vivero International School	- 450m
Mount Litera Zee School	- 900m
Pumpkin Patch School	- 2km
Podar International School	- 3.6km
Euro School	- 1.3km
Sesame Street Preschool	- 2.3km
Akshara International School	- 3.1km
Infant Jesus High School	- 2.3km

HOSPITALS

Chirayu Children's Hospital	- 280m
Polaris Healthcare	- 400m
Orion Hospital	- 400m
Lifepoint Hospital	- 750m
Phoenix Hospital	- 1.7km
Apex Hospital	- 1.7km
Superspeciality Hospital	- 2.9km

MALLS

Pristine Square	- 450m
Commercia Mall	- 600m
Proposed Phoenix Mall	- 1.7km
Xion Mall	- 1.9km
D-Mart Hinjewadi	- 2.4km
Vision One Mall	- 3.0km
Decathlon	- 3.0km
D Mart	- 3.3km
Star Bazar	- 0.9km
B.H.S	- 5.9km

RESTAURANTS

Tatva Veg	- 200m
Green Ways Veg	- 240m
Bird Valley	- 300m
Jalsa	- 350m
Flechazo	- 450m
Barbeque Nation	- 850m

COLLEGES

Swami Vivekanand College of Education	- 1.2km
Jayawant Institute of Management Studies	- 1.4km
Institute Of Science Poona's College Of Computer Science	- 1.5km
Genba Sopanrao Moze College of Engineering	- 2.4km
Indira Institute of Management	- 3.1km
Dr. D. Y. Patil Biotechnology & Bioinformatics Institute	- 3.5km
Marathwada Mitra Mandal's College Of Pharmacy	- 3.7km
Symbiosis Institute of International Business	- 4.3km
Balaji Institute of Modern Management	- 4.5km
AISS College	- 5.9km
Prof. Ramakrishna More Arts, Commerce & Science College	- 5.9km

SPORTS COMPLEX

Kalate Sports Academy	- 700m
Sports Park	- 700m
Silver Sports Badminton Court	- 700m
David Lloyd Clubs Talwalkars	- 850m
Club 29 Club and Banquet Hall	- 1.6km
CS GOSD Cricket Ground	- 1.9km
Chondhe Patil Sports Complex	- 2km
Shree Shiv Chhatrapati Sports Complex, Mahalunge	- 2.5km

OTHER

BRTS Route Wakad Chowk Stop	- 600m
Petrol Pump	- 650m
Proposed Metro Station Wakad	- 1.1km
Pimpri Metro Station	- 5.4km
Pune railway Station	- 15.5km
Talegaon MIDC	- 17.2km
Pune Airport	- 19.5km
Chakan MIDC	- 25km

ITREND FAMILY

DON'T MISS THE CHANCE TO BE A PART OF THE ITREND FAMILY



ITREND LANDMARKS

When our construction speed matches our selling streak



ITREND HOMES
LIFE TRENDS HERE
HINJAWADI II

Delivered Happiness
to 550 families.

Possession given
before RERA commitments.



ITREND® Life #Beyond4Walls
WAKAD

Possession before time,
that's what makes an investment
in us worthwhile.

Possession to start in few months,
1 year before our commitment
as per RERA.



ITREND® Life 2
WAKAD

Achieved a remarkable
construction milestone in
9 months merely

Work began in June 2021 & Entire
RCC of the building completed
in just 9 months

As on April 2022

ITREND LANDMARKS

When our construction speed matches our selling streak



ITREND® Life3 WAKAD

Achieving one Milestone
after another!

Work began in Sept 2021
13th slab completed.
Construction progress
in full swing



ITREND® WATERFRONT RAVET

When we swing into action,
we deliver perfection!

Launched in sept 2021,
Work began in dec'21,
All towers 3rd slabs
in progress

As on April 2022



THE PLUS DEVELOPER

SAHEEL PROPERTIES®

Bridging The Future

10
Years of Experience

10
Lacs Sq.Ft. Ongoing Development

15
Lacs Sq.Ft. Delivered Area

RAHO BEFIKAR

Itrend
Best Price
Promise

THE PRICE YOU SEE IS THE PRICE YOU PAY!

Buying a new home shouldn’t feel like you’re going into battle. Without the pressure to negotiate, be rest assured that we're offering the best bottom price to make sure that you've a worry free home buying experience with complete peace-of-mind at ITrend.

Happy Home Buying!

RAHO BEFIKAR

- Intelligently Planned ITREND Residences
- Uncompromised Construction Quality
- Before Time Possession
- Excellent CRM & Post Possession Service and Helpline
- Affordably Priced
- Assured Appreciation

SAHEEL PROPERTIES
Bridging The Future

KOHINOOR
A KRISHNAKUMAR GOYAL ENTERPRISE

9511951142

www.saheelproperties.com

Site Address: 186/187, Datta Mandir Road, Next to CCD,
Shankar Kalat Nagar, Wakad - 411057

Maha RERA No.:
P52100034723

Scan for details

Disclaimer- The images included the artist's impression indicating the anticipated appearance of ongoing development. The information is presented as genral information and no warranty, is expressly or impliedly given that completed development will comply in any degree with such artist's impression or anticipated appearance.This brochure is purely conceptual and not a legal offering.The developers reserve the rights to amends the layout plan, elevations, specifications and amenities.