
ANANDA JYOTHI
CONSTRUCTIONS
NO : 6/19


ANANDA JYOTHI
CONSTRUCTIONS
ANANDA JYOTHI
CONSTRUCTIONS


ANANDA JYOTHI
CONSTRUCTIONS
ANANDA JYOTHI
CONSTRUCTIONS


ANANDA JYOTHI
CONSTRUCTIONS
NO : 6/19
ANANDA JYOTHI
CONSTRUCTIONS


N
W
E
S
TOILET
9'6"X4'6"
TOILET
7'9"X4'6"
LIFT
BED-2
10'0"X11'4½"
BED-1
11'3"X10'0"
DRESS
6'3"X3'4½"
CORRIDOR
BALCONY
3'6"X11'0"
LIVING CUM DINING
24'4½" X 11'0"
1025 sqft
BED-2
13'4½"X9'1½"
O.T.S
4'6"X2'6"
TOILET
4'6"X6'3"
KITCHEN
9'3"X9'1½"
BALCONY
3'3"X10'7½"
LIVING CUM DINING
25'10½" X 10'7½"
1075 sqft
5'1½"X4'3½"
BED-1
13'6"X9'9"
TOILET
5'1½"X5'6"
KITCHEN
9'9"X9'9"



SECOND & THIRD FLOOR PLAN

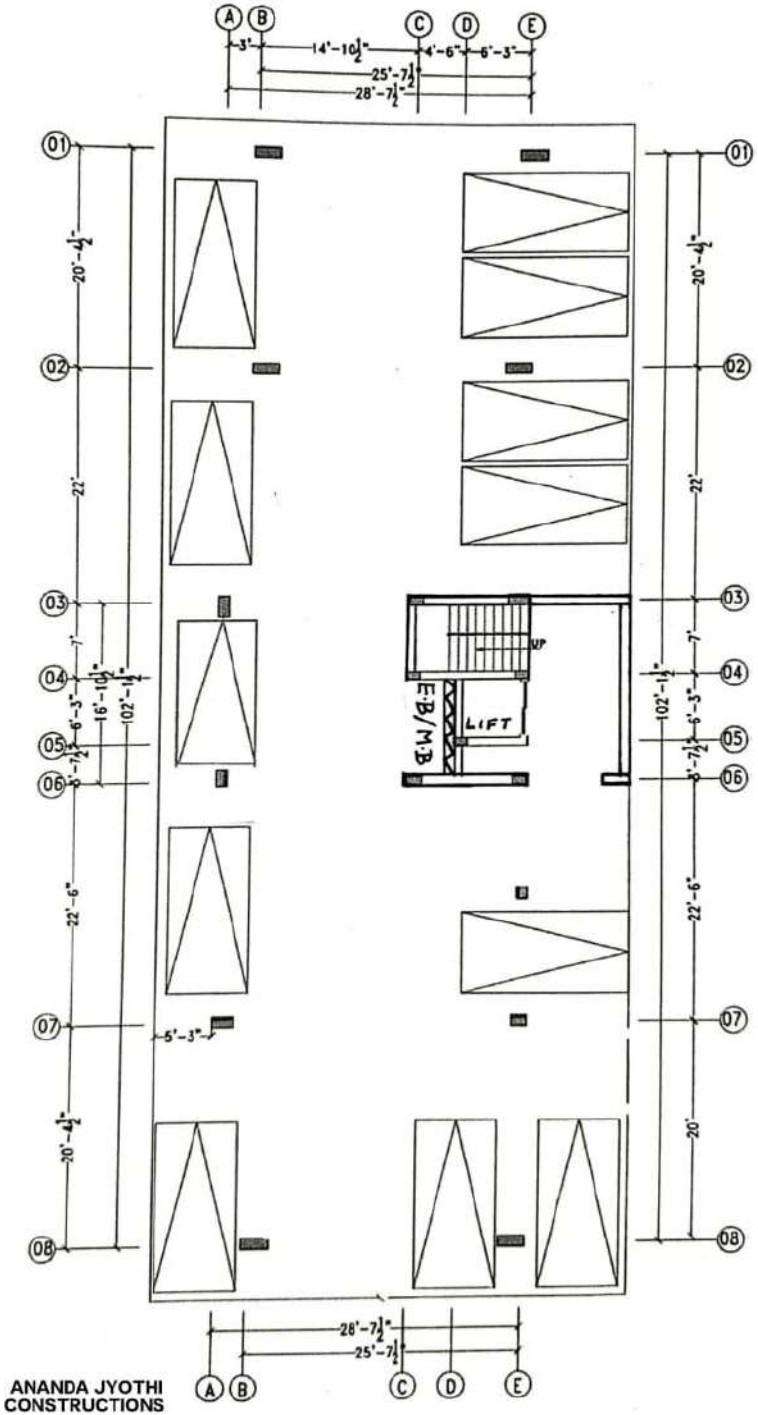

ANANDA JYOTHI
CONSTRUCTIONS

9840032339
984026333

STILT FLOOR PLAN